PRODUCT SIZE

Q4-S

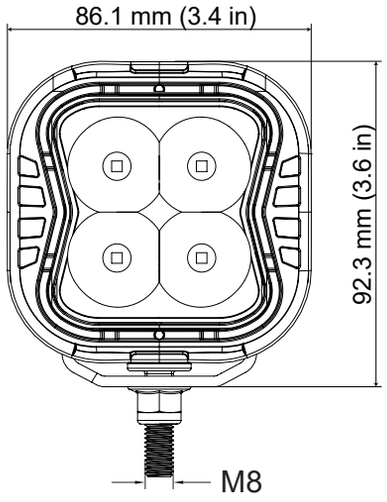

Q4-R

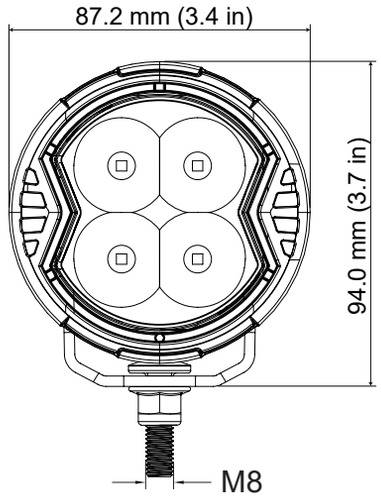

MAINTENANCE & TROUBLESHOOTING

Cleaning: Use mild soap and water only. Avoid high-pressure spray directly at the lens or seals from a distance closer than 12 inches (30cm).
Flickering: Check for loose ground connections or a low battery charge.
Condensation: Small amounts of moisture inside the lens are normal due to temperature changes and will dissipate through the integrated breather.

SUPPORT & WARRANTY

Warranty: For product warranty please refer to our website www.primelux.com
Contact: support@primelux.com

PRIMELUX®
www.primelux.com
© Primelux. All rights reserved.
Ref: 20260521

PRIMELUX®

Q4 SERIES

3.4" LED POD LIGHT INSTALLATION GUIDE



PLEASE READ THIS GUIDE CAREFULLY BEFORE USING AND RETAIN FOR FUTURE REFERENCE

SAFETY INFORMATION

WARNING: READ BEFORE STARTING
Failure to follow these instructions may result in personal injury or damage to your vehicle's electrical system.
DISCONNECT POWER: Always disconnect the negative battery terminal before starting any electrical work.
VOLTAGE: Operate within 10-30V DC only.
EYE SAFETY: Do not stare directly into the light beam. Temporary or permanent eye damage may occur.
HEAT: Housing can reach high temperatures during operation; allow to cool before touching.
Mounting: Ensure the mounting surface is capable of supporting the unit's weight.

PACKAGE CONTENTS

- 1 x LED pod light
- 1 x U-bracket
- 1 x Long bolt with lock nut
- 2 x Short bolts with spring washers
- 1 x DT connector
- 1 x Clear lens cover
- 1 x Yellow lens cover

Actual quantity varies by package specification.

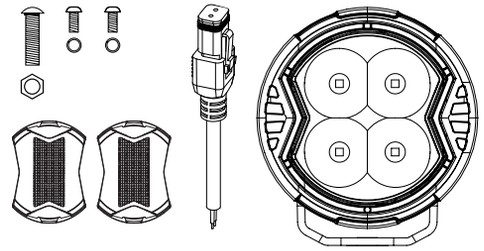

MOUNTING INSTRUCTIONS

Step 1: Choose the desired mounting locations for the light and your control switches.
Step 2: Drill an 8.5 mm (5/16") hole for the mounting bolt. Fasten the bracket to the vehicle using the supplied locknut (refer to the illustration). We recommend using lock washers for high-vibration environments.

INSTALLATION STEPS

Figure 1 Exploded View of Q4 SERIES

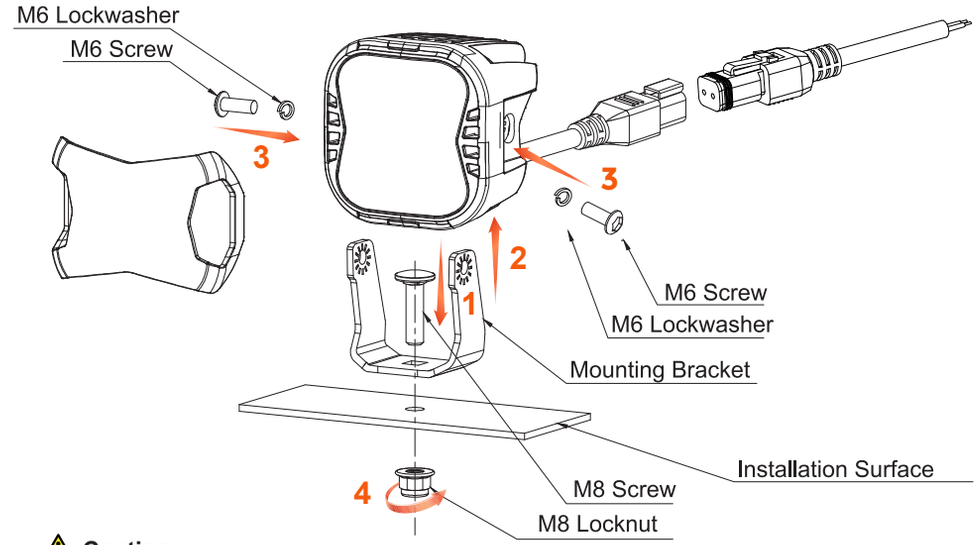

⚠ Cautions:

- **DT Connectors:** Do not forcibly separate DT plugs. Always depress the release latch on the female connector before disconnecting.
- **Carriage Bolts:** Ensure the square neck of each bolt fully seats into the bracket slot before tightening the nut to the specified torque.
- **Locknuts:** Verify proper light alignment completely before final tightening. Loosening a fully tightened locknut may strip threads and result in premature hardware seizing.

WIRING & CONNECTION

